Saltfire ST1, ST1 Vision, ST3

INSTALLATION AND OPERATING INSTRUCTIONS.

INTRODUCTION

SAFETY

Safety is the most important consideration when using and installing your stove. If not installed and used correctly, a house fire could result. Installation must comply with relevant national and local Building Regulations and fire safety standards.

IN THE EVENT OF CHIMNEY FIRE, EVACUATE THE PROPERTY AND CALL THE EMERGENCY SERVICES.

Your stove will be heavy, and care needs to be taken when lifting - 2 people will normally be required to lift.

UNPACKING

Your stove will have several of its components stored inside the stove itself for transportation.
Do NOT drag the stove on its legs – it must be carefully lifted into place.
You will also find a glove which must be used when opening the door or when adjusting air vents when the fire is hot.

INSTALLATION

Installation of your stove must comply with relevant local and national Building Regulations and fire safety standards.

TECHNICAL

Parameter	**ST1**	**ST1 Vision**	**ST3**
Useful Heat Output Range, kW:	2-6	2-6	3-8
Nominal Heat Output, kW:	5.0	5.0	7.3
Efficiency at Nominal Output, %:	78.7	78.7	76.3
Mean CO emission (at 13 % O2), %:	0.07	0.07	0.06
Mean flue gas temperature, °C:	281	281	364
Flue gas mass flow, g/s:	4.4	4.4	5.6
Mean CnHm emission (at 13 % O2), Nmg/m3:	55	55	37
Mean NOx emission (at 13 % O2), Nmg/m3:	104	104	94
DIN Plus particulates (at 13 % O2), Nmg/m3:	25	25	34
Minimum distance to combustible Back Wall, mm:	500	500	475
Minimum distance to combustible Side Wall, mm:	400	400	400
Suitable for 12mm hearth	✓	✓	✓
5” / 125mm flue size	✓	✓	✓
DEFRA Exempt for burning wood in Smoke Control Areas	✓	✓	✓
EcoDesign 2022 Ready	✓	✓	✓
clearSkies	✓	✓	✓

The stove must not be installed within the specified minimum distances to combustible materials as shown in the table above. Adjacent walls should be of non-combustible materials and construction, preferably masonry or brickwork.

When installed inside a fireplace recess (with solid non-combustibles walls) we recommend a minimum 50mm clearance at the sides and rear of the stove to allow good air circulation and achieve best performance.

Your stove will require a constant air supply and should not be used at the same time and in the same room/space as extractor fans or any device which may draw air supply away from the stove.

The stove should be installed on a level floor with adequate load bearing capacity.

The stove needs to stand on a hearth of non-combustible materials not less than 12mm thick conforming to Building Regulations.

A Carbon Monoxide detector must be fitted in the same room as the appliance.

NOT suitable for installation in a shared flue system.

If installed in a standard type chimney, a register plate needs to be fitted inside the chimney.

When purchasing flue pipe, 5” diameter is required. The flue pipe must be fitted INSIDE the flue spigot and sealed with a generous amount of Fire Cement.

We recommend that you have a qualified fitter install your stove. You can find a HETAS qualified installer in your area by going to the HETAS website – www.hetas.co.uk.

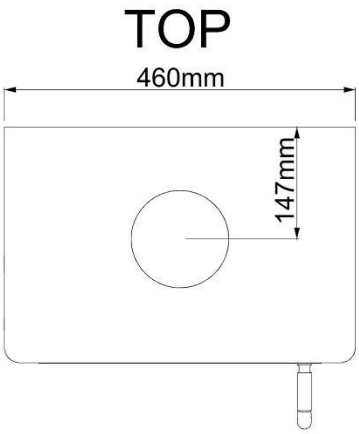

ST1

note: ST1 Vision has same body dimensions but larger door

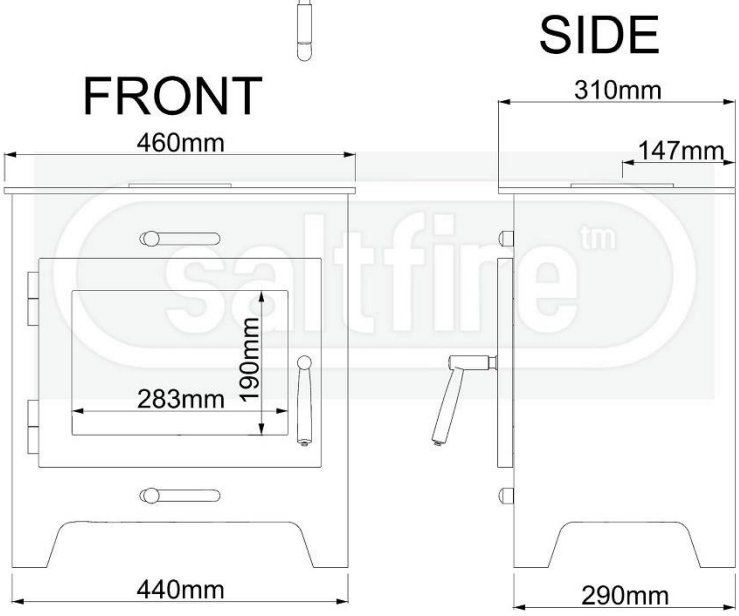

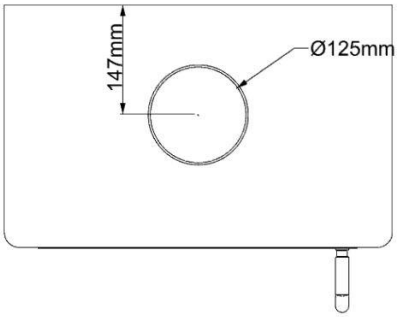

ST3

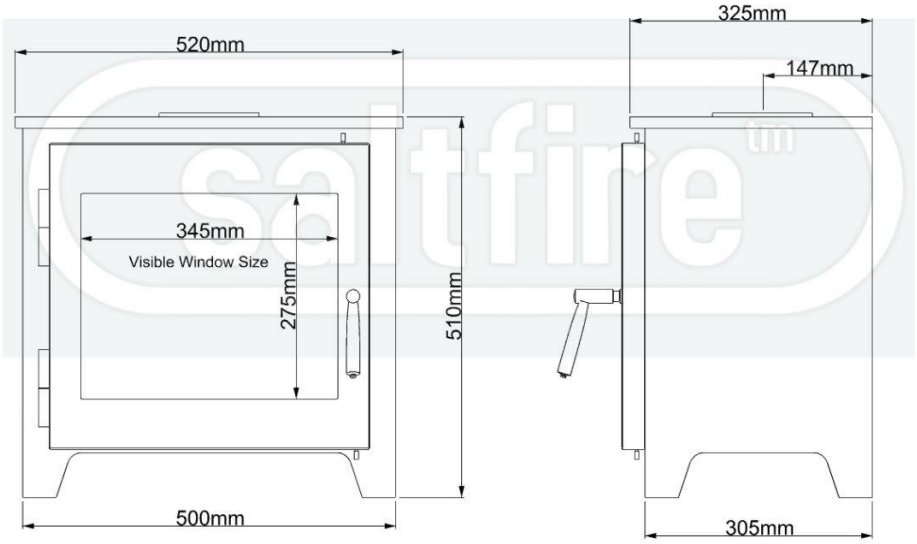

OPERATING INSTRUCTIONS

“The Clean Air Act 1993 and Smoke Control Areas”

Under the Clean Air Act local authorities may declare the whole or part of the district of the authority to be a smoke control area. It is an offence to emit smoke from a chimney of a building, from a furnace or from any fixed boiler if located in a designated smoke control area. It is also an offence to acquire an "unauthorised fuel" for use within a smoke control area unless it is used in an "exempt" appliance ("exempted" from the controls which generally apply in the smoke control area).

In England appliances are exempted by publication on a list by the Secretary of State in accordance with changes made to sections 20 and 21 of the Clean Air Act 1993 by section 15 of the Deregulation Act 2015. Similarly, in Scotland appliances are exempted by publication on a list by Scottish Ministers under section 50 of the Regulatory Reform (Scotland) Act 2014.

In Wales and Northern Ireland these are authorised by regulations made by Welsh Ministers and by the Department of the Environment respectively.

Further information on the requirements of the Clean Air Act can be found here:
https://www.gov.uk/smoke-control-area-rules

Your local authority is responsible for implementing the Clean Air Act 1993 including designation and supervision of smoke control areas and you can contact them for details of Clean Air Act requirements”

“The Saltfire ST1 / ST1 Vision / ST3 has been recommended as suitable for use in smoke control areas when burning wood.

Refuelling on to a low fire bed

If there is insufficient burning material in the fire bed to light a new fuel charge, excessive smoke emission can occur. Refuelling must be carried out onto a sufficient quantity of glowing embers and ash that the new fuel charge will ignite in a reasonable period. If there are too few embers in the fire bed, add suitable kindling to prevent excessive smoke.

Fuel overloading

The maximum amount of fuel specified in this manual should not be exceeded, overloading can cause excess smoke.

Operation with door left open

Operation with the door open can cause excess smoke. The appliance must not be operated with the appliance door left open except as directed in the instructions.

Dampers left open

Operation with the air controls or appliance dampers open can cause excess smoke. The appliance must not be operated with air controls, appliance dampers or door left open except as directed in the instructions.

FUEL

Wood only - All types of wood are suitable provided they are well seasoned, UNTREATED, and have a moisture level between 12% and 20%. For soft woods, typically they will need to have been left in suitable storage for 9+ months in order for the moisture to evaporate. For hardwoods, this will usually be 18 months+. It is recommended that logs should be no more than 4” or 125mm in diameter.
If you are unsure of the moisture content of your fuel, then you can buy a moisture meter which will indicate the moisture levels in your fuel.

Liquid fuels must NEVER be used.

WARNING: Wet timber should not be used as this will create excess tar deposits in the chimney and stove and could increase the risk of chimney fire. Timber which is not of a suitable moisture content will also create more smoke and harmful emissions.

Never use your stove as incinerator to burn waste or rubbish. Never burn Petro-Coke or coals designed only for open-fires.

AIR INLET CONTROLS

Your stove has two air inlet areas (see diagram above)-

The upper vent provides air supply for the glass air-wash system– this is called the Secondary air – when this vent is open, the door glass is kept clean by high speed air rushing downwards across the inside of the glass. By moving the Secondary vent knob to the left, airflow into the stove is increased.

The other air inlet is located under the door and is called the Primary air supply. Moving the lever to the left increases the airflow into the stove. The air is then channelled through a chamber under the stove and to the rear of the firebox and enters the firebox via a series of small holes at towards the back of the firebox.

Both air inlet controls are designed such that they cannot be fully shutdown. This is necessary to aid a clean combustion and comply with appliance exemption via DEFRA.

The Entire Stove Will Become HOT!

The glove is provided for adjusting the air inlets and for opening the door when the stove is hot, as these knobs will heat up when in use.

NOTE – all parts of the stove will become hot during use and care needs to be taken to avoid injury through burning.

LIGHTING THE FIRE

- Prior to lighting the fire for the first time, ensure that-
- Installation and building work is complete.
- The chimney is suitable and sound and has been swept and free from obstruction.
- Adequate ventilation and provision for combustion air has been made.
- That the stove installation has been carried out in accordance with Building Regulations and any applicable local regulations as well as these installation instructions.
- That chimney draw has been checked and within specification. (The stove has been tested at nominal output with a flue draught of 12 Pa)

ESSENTIAL INSTRUCTIONS BEFORE USE – It is essential to follow these **'tempering-in' instructions** in order to avoid serious damage to your stove. The castings of your stove require very gentle 'normalising' to release stresses in the metal formed during the casting process. The high temperature paint finish also requires curing: -

Initial paint curing:

Note: NEVER wipe the stove in the early stages (prior to paint fully curing), as the paint will be very soft and will damage easily. NEVER attempt to clean or wipe the paint surface when warm or hot. Please read the following and follow thoroughly.

The stove is finished in specialist high temperature coating which is air-dry but not yet cured. The stove should be brought up to temperature gradually over the course several fires to complete this process. If the stove gets too hot or not hot enough during this process, then the curing process can fail causing issues with the paint surface.

1) For the first three fires (all on the same night), use KINDLING ONLY, with each burning for 15-20 minutes and each fire using approx. 500 grams of kindling. Start the second and third kindling fires whilst the fire is still warm from previous fires, but with around 30 minutes cooling time in between. Once the three kindling fires have burnt through, and whilst the stove is still warm, but slightly cooled, light a normal fire with three dry logs weighing around 1.2 kgs in total. This fire should burn for between 45 and 60 minutes. Now allow to FULLY COOL naturally. The paint should now be cured.

2) Once the curing process has been completed satisfactorily, normal fires can be lit –

Next Stage - stove tempering:

For the first 3 hours burning use just small wood fires, then for the next 15-20 hours, total burn time, fires must be very gently increased in temperature and log size and load and NO SOLID FUELS (products other than wood) must be used during this period. A stove thermometer will be a valuable tool in helping you to achieve this and to ensure an efficient burn rate in future. After these small fires, gently increase fires over the course of a week or so. Starting a large fire too soon is likely to damage the stove in which case will not be covered by the warranty.

ENSURE THAT YOU HAVE READ AND UNDERSTOOD THESE INSTRUCTIONS BEFORE LIGHTING THE FIRE, AND THAT YOU ARE CONFIDENT THE STOVE HAS BEEN INSTALLED CORRECTLY.

ALWAYS WEAR A PROTECTIVE GLOVE WHEN REFUELLING YOUR STOVE.

Ignition (FOLLOW INITITAL TEMPERING INSTRUCTIONS FIRST TO AVOID DAMAGE)

- Ensure the ash-pan is in place.
- Ensure all air inlets are fully open
- Construct a pile of kindling in the middle of the firebox base using approximately 1kg of kindling wood
- Light with a single chemical firelighter
- Partially shut the door but leaving it cracked open slightly
- After about 5 minutes or when the fire is well established, shut the door
- After a further 3-5 minutes as the fire starts to die, add a further three larger pieces of wood weighing approx. 1kg.
- Once theses logs are alight, and after about 7 minutes or so, a normal load of 2 or 3 logs weighing up to **1.5kg (for the ST1)** or **1.7kg (for ST3)**, **(ONLY AFTER THE INITIAL TEMPERING PERIOD HAS BEEN FOLLOWED – SEE ABOVE)**
- Once this load is burning well, the Primary and Secondary vents can be altered according to your required burn rate and chimney draw strength.

Refuelling

- Open all air vents
- Add up **1.5kg (for the ST1)** or **1.7kg (for ST3)** of wood
- After about 2 to 3 minutes or when flames from the fresh fuel fully established, reduce the Primary vent as necessary.
- At high power output, your stove will require refuelling approximately every hour.
- It is important to follow these instructions in order to achieve clean burning and to maximise the efficiency of the stove
- Do not leave the fire unattended until flames are well established on the newly charged logs
- Always refuel onto hot embers.
- If the fire has died out at the point of refuelling, use kindling to re-establish the fire and follow the "Ignition" procedure above.
- It is important that the stove is not overloaded with fuel.
- Reduced burn rates can be achieved by reducing the openings of the Secondary and Tertiary air vents.
- Operation with the door open can cause excessive smoke. The appliance must not be operated with the door left open except as directed in the instructions above.

UK Clean Air Act 1993 - Smoke Control Areas

The Saltfire ST1 / ST1 Vision / ST3 wood-burning stove is suitable for use in smoke control areas when used in accordance with these instructions.

WARNING- The high temperature paint covering the stove will give off some fumes during the initial few uses of the stove. The fumes are non-toxic, but some people may find them unpleasant – Ensure the area is well ventilated during this period.

The higher nominal output rating of this stove is based on around **1.5kg (for the ST1)** of seasoned logs which would require refuelling every 60 minutes or **1.7kg (for the ST3)** of seasoned logs which would require refuelling every 45 minutes.

This stove is suitable for intermittent burning and should not be used constantly for extended periods. Not suitable for overnight burning.

Under certain abnormal weather conditions, e.g. down draughts, it may be difficult to get sufficient draw through the appliance to achieve good combustion. When this happens, the stove should not be used.

IMPORTANT: -

As of October 2010, it is a legal requirement to use a Carbon Monoxide Detector in the same room as the stove. This needs to incorporate a battery which lasts the life of the detector.

CLEANING/MAINTENANCE

Regular cleaning of the stove is essential for safety and efficiency. The ash-pan should be checked/ emptied at least after every use, and during use if burning for longer periods. Extra care must be taken when removing warm or hot ashes.

Step by step maintenance instructions:

1) A minimum of once per year the flue system should be cleaned/swept by a qualified chimney sweep or suitably qualified stove installer. The servicing of the appliance can usually be carried out at the same time. Whether the system needs sweeping more frequently than this will depend on use.

2) Baffle plate should be removed and checked for debris twice a year as a minimum depending on use. Warped/misshapen baffle plates can be a warning sign that the stove has been over-fired (allowed to excessively heat on one or more occasions).

3) Once removed, brush the baffle using a stiff brush or wire brush to remove any deposits. Clear any debris from the upper parts of the stove above where the baffles normally sit.

4) Inspect firebricks on both the sides, rear and base for cracks - (some are normal and not a fault. Nor are they detrimental to the workings of the stove, however it is good practice to be aware as any develop and over time if they worsen, they may need replacing). If you feel a crack in the firebrick is just cosmetically unsightly it can be filled with a small amount of fire cement.

5) Vacuum or brush out the inner stove box thoroughly.

6) Visually check that the glass is still making a good seal against its rope on the inside of the door frame and that it's retaining clips remain firmly in place to the touch.

7) Check that the door is making a good seal with the body of the stove all around (over time the rope will flatten out and loose some flexibility - when this happens and when it is no longer sealing fully all the way round, it needs to be replaced). The rope size used here is a 10mm-Soft type.

8) Blemishes or scratches to the paintwork can be touched up using a suitable high temperature stove paint in a spray can. Ensure the stove is cool and clean before applying and follow the paint manufacturer's instructions. Contact Saltfire Stoves directly if you are unsure which paint to use.
Throughout the season, it is good practice to keep the stove in generally good clean order which will prolong the life of serviceable components and enhance the experience you have with your fire.

9) NEVER wipe the stove in the early stages (prior to paint fully curing), as the paint will be very soft and will damage easily.

10) To keep the outer body clean, simply dust over with a clean soft duster when cold.

11) If there are marks which cannot be removed with a duster, use a slightly moistened cloth very gently, but only when the stove is cool and has not been in use. Then pat dry with absorbent paper towel.

12) Regularly vacuum soot and dust from around the inside of the door and around the glass and rope seals.

13) If glass gets dirty on the inside from soot, clean with liquid 'stove glass cleaner' and a soft cloth OR with an "Atmosfire Dry Wiper", produced by Schott, (manufacturers of stove glass), and available online. Do this as soon as possible once the soot appears, but only when the fire is completely cool. Never use newspaper or soot or any other abrasive or cleaning method on the glass.

If the glass becomes stained from the inside, the air-wash vent may need opening more during use. *(See 'troubleshooting guide' for other possible causes).*

The high temperature paint which your stove is finished in should last several years with normal use, but when it does eventually require re-finishing, black heat resistant paint in spray cans can be purchased from most hardware stores. – Do not use regular paint which is not high temperature resistant.

After prolonged periods of not using the fire, the stove and flue system should be checked for blockages prior to re-lighting.

We recommend regular servicing and safety checks are carried out by a qualified engineer.

There must be no unauthorised modification of the appliance. Use only replacement parts recommended by the manufacturer.

Troubleshooting Solutions For Stove Problems

Installed and used correctly your stove will provide years of warmth with little effort but used incorrectly will be difficult to achieve the results you expect and can be damaged.

Combustion is a complex chemical process with many variables, all of which need to be correct for your stove to burn correctly. Taking the time to understand these variables and the combustion process will make your life with your new stove a happy one.

1. Stove is difficult to light / keep lit

Common causes:

a. **Damp fuel** – Wood should be maximum 20% moisture and ideally 12-15%. We strongly advise purchasing a digital moisture meter to test your logs. Always split logs in half and test the centre of the log.

b. **Poor draught and chimney strength** – Your chimney needs to pull through adequate air for combustion. Flue draught should be between 12Pa and 18Pa – if in doubt consult a local expert.

c. **Logs too big** – Always start fires small and gradually build them up. Begin with paper or solid firelighters, building a small fire with kindling (small sticks of wood) until the kindling is well alight and hot. Then gradually build the fire with your wood logs (not too thick). (Splitting the logs will increase the surface area allowing more thorough burning). Once the firebox is up to temperature, slightly larger logs can be added.

d. **Chimney/flue blocked** – Excessive soot should not be allowed to build up in the flue – flues should be professionally cleaned when required and, in any case, at least once per year, or more if your chimney / fuel type is causing excessive soot build up.

2. Fuel burns too quickly

The rated output on your stove is based on burning dry seasoned hardwood and re-fuelling every hour. By turning down the vent controls the fuel will burn slower and last longer.

Common causes:

a. **Excessively strong chimney draught** – If by turning down the vents the fire still burns too quickly, this is normally due to excessively strong draught on the chimney. This will lead to over-firing of the stove which is inefficient, losing excessive heat into the chimney and pulling too much cold air through the house. A flue damper fitted into the first section of flue pipe can help to calm a chimney draught.

b. **Fuel type/size** – try experimenting with different types of wood and different sized logs. Slightly larger logs will burn slower. Softwood such as pine will burn particularly fast. Ideally use seasoned, naturally dried logs (hardwood) where possible.

3. Smoke comes back into room

A small amount of smoke entering the room when you open the stove door is normal but should stop after a few seconds….

If smoke ever leaks constantly into the room stop using the fire immediately, shut down all vents on the stove, open windows and exit the room. Do not use the stove until a local expert has established the problem.

Common causes:

a. **Insufficient air supply into the room** – do you have an air brick of sufficient size to feed the stove with air?

b. **Blocked chimney** – have the chimney swept and checked by a registered chimney sweep.

c. **Insufficient chimney draught** – can be due to a variety of reasons – please refer to previous text under "Poor draught and chimney strength"

d. **Rapid condensation of the gases** - causing them to slow down and back up in the chimney – this can be due to too broad a chimney/flue, relative to the size of the appliance or the flue not being adequately insulated. You may need a flue liner and/or insulation in the chimney.

4. Glass gets dirty quickly

Common causes:

a. **Top vents not open** – Your stove has a top vent this controls the Airwash system – the top vent needs to be constantly open adequately to ensure enough air is coming into the stove. No Airwash will work fully when the stove is burning very slowly (slumbering).

b. **Primary Vent left open** – Primary vent when left open will interfere with the operation of the Secondary (Airwash), causing blackening of the window. Always shut Primary once fire is established, and only ever open as much as necessary to get the fire going or to give a short 'boost' to new wood when refuelling.

c. **Poor fuel** – wet wood or softwood (e.g. pine) will produce a lot of tar, creosote and soot, dirtying the glass and eventually blocking the flue.

d. **Insufficient chimney draught** – see previous note under "Poor draught and chimney strength".

e. **Baffle plates incorrectly fitted** – see previous diagram for correct positioning of baffles.

f. **Fuel loaded to close to window** – The wood needs a good clear distance away from the glass – otherwise it will produce thick black marks on the glass and interfere with the Airwash airflow.

5. Not enough heat being produced

Common causes:

a. **Poor quality fuel** – logs should be dry well seasoned hardwood.

b. **Poor draught and chimney strength** – see previous notes.

c. **Excessive draught** – too much heat being lost up the chimney – try a damper in the flue.

d. **Insufficient air supply** - Check air supply is sufficient / vents on stove are clear. Does the room have a vent?

e. **Not enough fuel being burned** – the rated output of your stove is based on burning beech wood (typical of most hardwoods), refuelling once per hour. 1kg of this wood has approximately 4-5 kw hours of energy.

f. Larger stove / stove with higher output required for room size.

6. Too much heat in room

Common causes:

a. **Excessive chimney draw** – try fitting a damper unit in flue

b. **Too much air supply** – close down primary vent, then if still too hot reduce tertiary and secondary vents.

c. Stove may be too large for room size.

7. Fire bricks deformed / Baffle plate deformed

Your stove will have been designed to operate correctly for many years with a relevant quantity of fuel and re-loading times. The fire bricks and baffle plate can over time start to bow/deform – this can only be caused by very high temperatures. Using Solid Fuel products can accelerate this process but burning wood at too high a temperature can also cause damage to internal parts.

Common causes:

a. **Excessive chimney draw** – try a damper in the flue.

b. **Excessive primary air supply** – close down primary vents.

c. **Incorrect fuel – NEVER use Petroleum Coke, Bituminous fuel, House coal or any un authorised fuel.**

d. **Stove overloaded** – excessive burning of too much fuel.

The baffle plate and the inner linings of the stove all designed to be replaceable parts – call us if you need to order new ones.

What to do in the event of a chimney fire: -

- cut off the air supply to the stove, i.e. close the primary and secondary air supplies
- move any combustible materials well-away from the stove
- get everyone out safely
- make sure that the fire brigade has clear access
- call 999

If you have any questions or concerns regarding the safe use of your stove, please contact us: - Saltfire Stoves Ltd, Station Works, John's Road, Wareham, Dorset, BH20 4BG, 01929 555211, enquiries@saltfirestoves.com

© Copyright – Saltfire Stoves Ltd 2018

Warranty

When purchased new from either Saltfire Stoves directly, or an Authorised Saltfire Retailer your new stove includes an Extended 3-year limited warranty on the main body of the stove.
Details of Authorised Retailers can be found at www.saltfire.co.uk

Your warranty needs to be registered within 30 days of purchase and will be effective from date of purchase.
Failure to register on time will reduce warranty period to 12 months.

To register, please send an email to enquiries@saltfire.co.uk. Please include your name, address of installation, model, date of installation, Installers details, retailer details (where you purchased the stove and the date of purchase). We will confirm your registration by email, so if posting your registration, please ensure to include your email address.

If you do not register in time or have not purchased through an Authorised Retailer don't worry - our stoves are built to last and you are unlikely to have any issues. In the unlikely event you do encounter any problems, we will still be here to help.

The Warranty is valid for the first owner at the first installed location only (not transferable).
To qualify, the appliance must be installed to the relevant Building Regulations standards by a suitably trained competent person (such as a HETAS installer in the UK).
Original Certificate of installation and the commissioning report needs to be kept for reference in the event of warranty claim.
Original Proof of Purchase (receipt or invoice) must be kept for reference and proof.
Any use of the appliance contrary to any instructions in this manual will invalidate the warranty.
The 3-year Extended Warranty guarantees the main stove body be free of manufacturing defects for this period.

Excluded from any warranty are:

1) Paint finish discolouration can occur normally and is not considered a fault. Paint which has failed to cure properly due to initial over or under firing is excluded from warranty.

2) Consumable items including but not limited to internal firebricks, glass, baffle plates, grates, log retaining bars, paint and surface finishes, door and glass rope seals.

3) Damage caused by incorrect use, incorrect/ non-recommended fuel, over-firing or poor maintenance will not be covered and will invalidate the warranty.

4) Damage caused by unauthorised modifications or repair.

5) Faults or defects caused by local specific conditions such as draught problems or chimney defects.

6) Damage caused by corrosion due to the appliance being stored in unheated damp environments or by excessive moisture ingress via flue system.

7) Warranty claims are limited to the repair or supply of replacement parts or entire appliance where necessary (to be determined by Saltfire) including shipping costs of the replacement/ repaired part (UK
mainland), and fitment of the replaced or repaired part if required, at the Saltfire factory. This is not an 'onsite' warranty and any installation or removal costs, or incidental costs will neither be covered nor accepted. The customer is responsible for returning the damaged part to our factory when requested to do so
In the event of a successful warranty claim Saltfire reserve the right to either replace, repair or refund the purchase price of the goods in question.

8) Replaced or repaired parts are covered for the remainder of the Warranty period.

Should you encounter any problems with your system and if there is any doubt as to the cause of the issue, first contact your installer. If the appliance is suspected to be at fault, contact your
Saltfire Retailer from whom you purchased the appliance - They will be able to help you quickly or contact us at Saltfire on your behalf. You will need to provide a copy of your original sales receipt, installation certificate (i.e. from HETAS)/or Building Control Certificate, and Service Record.

Installer Name and HETAS no. .....

Enter Model Name.....

Enter Installation Date.....

Enter Installation Address.....

saltfire®

Service Records (to be completed by Service Engineer)

1st SERVICE
Date of Service:.....
Next Service Due:.....
Details of Service work completed:

Signed:.....
Dealer's Stamp/HETAS Registration Number:

2nd SERVICE
Date of Service:.....
Next Service Due:.....
Details of Service work completed:

Signed:
Dealer's Stamp/HETAS Registration Number:

3rd SERVICE
Date of Service:.....
Next Service Due:.....
Details of Service work completed:

Signed:
Dealer's Stamp/HETAS Registration Number:

4th SERVICE
Date of Service:.....
Next Service Due:.....
Details of Service work completed:

Signed:
Dealer's Stamp/HETAS Registration Number:

5th SERVICE
Date of Service:.....
Next Service Due:.....
Details of Service work completed:

Signed:
Dealer's Stamp/HETAS Registration Number:

6th SERVICE
Date of Service:.....
Next Service Due:.....
Details of Service work completed:

Signed:.....
Dealer's Stamp/HETAS Registration Number:

7th SERVICE
Date of Service:.....
Next Service Due:.....
Details of Service work completed:

Signed:
Dealer's Stamp/HETAS Registration Number:

8th SERVICE
Date of Service:.....
Next Service Due:.....
Details of Service work completed:

Signed:
Dealer's Stamp/HETAS Registration Number:

9th SERVICE
Date of Service:.....
Next Service Due:.....
Details of Service work completed:

Signed:
Dealer's Stamp/HETAS Registration Number:

10th SERVICE
Date of Service:.....
Next Service Due:.....
Details of Service work completed:

Signed:
Dealer's Stamp/HETAS Registration Number: